Interpolator

MJ620

Compact one-axis module with analog input port

- Divides analog input signal into 32 to 800 divisions.
- Produces A/ B quadrature signal output from the differential line driver when combined with SL700 series scale and PL101 series head cable (both sold separately).

Specifications

Model	MJ620
Power supply voltage	5 V ± 5%
Power consumption	2.2 W (with PL101)
Output interface	Line driver (EIA-422 compliance)
Output	A/B phase, Z Alarm
Number of division	800,400,160,80,40,32 (Correspond to resolution 1,2,5,10,20,25 µm) And 1/2 of this (But concurrent reference point not satisfied)
Max. response speed	6.4 m/s (with phase difference of 100 ns and resolution of 1 µm)
	16 m/s (with phase difference of 100 ns and resolution of 2 µm)
	36.8 m/s(with phase difference of 100 ns and resolution of 5 µm)
	56 m/s (with phase difference of 100 ns and resolution of 10 µm)
Min. phase difference	100 ns
Input level	SIN. COS signal 0.6 Vp-p to 1.2 Vp-p at 120 Ω load Reference signal 0.2 V to 1.5 V at 120 Ω load
Alarm	Speed alarm (min. phase difference time or max. response frequency), Level alarm (0.6 Vp-p or less), Min. alarm time about 400 ms NOTE: Alarm may not work due to abnomal offset occurred by breakage etc.
System starting up time	0.5s or less after powering up
Operating temperature	0 ˚C to 45 ˚C / 32 ˚F to 114 ˚F
Storage temperature	-20 ˚C to 60 ˚C / -4 ˚F to 140 ˚F
Mass	60 g/ 0.132 lbs

Options

MZ2: Output connector
MZ5: Metal case for MJ620

*The MJ620 Interpolator meets the "applied standards" stated in the specifications table when fitted with the optional MZ5 metal case (see below). Make sure that the MJ620 is used with the MZ5 or like case with the same specifications as MZ5.

Dimensions

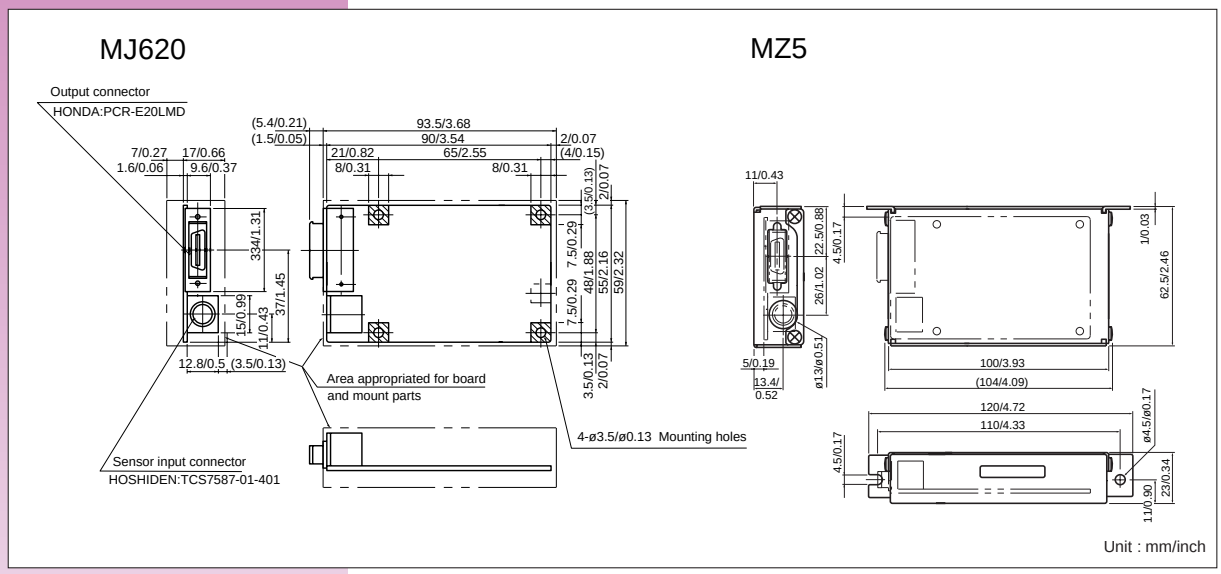

Detectors & Interpolators